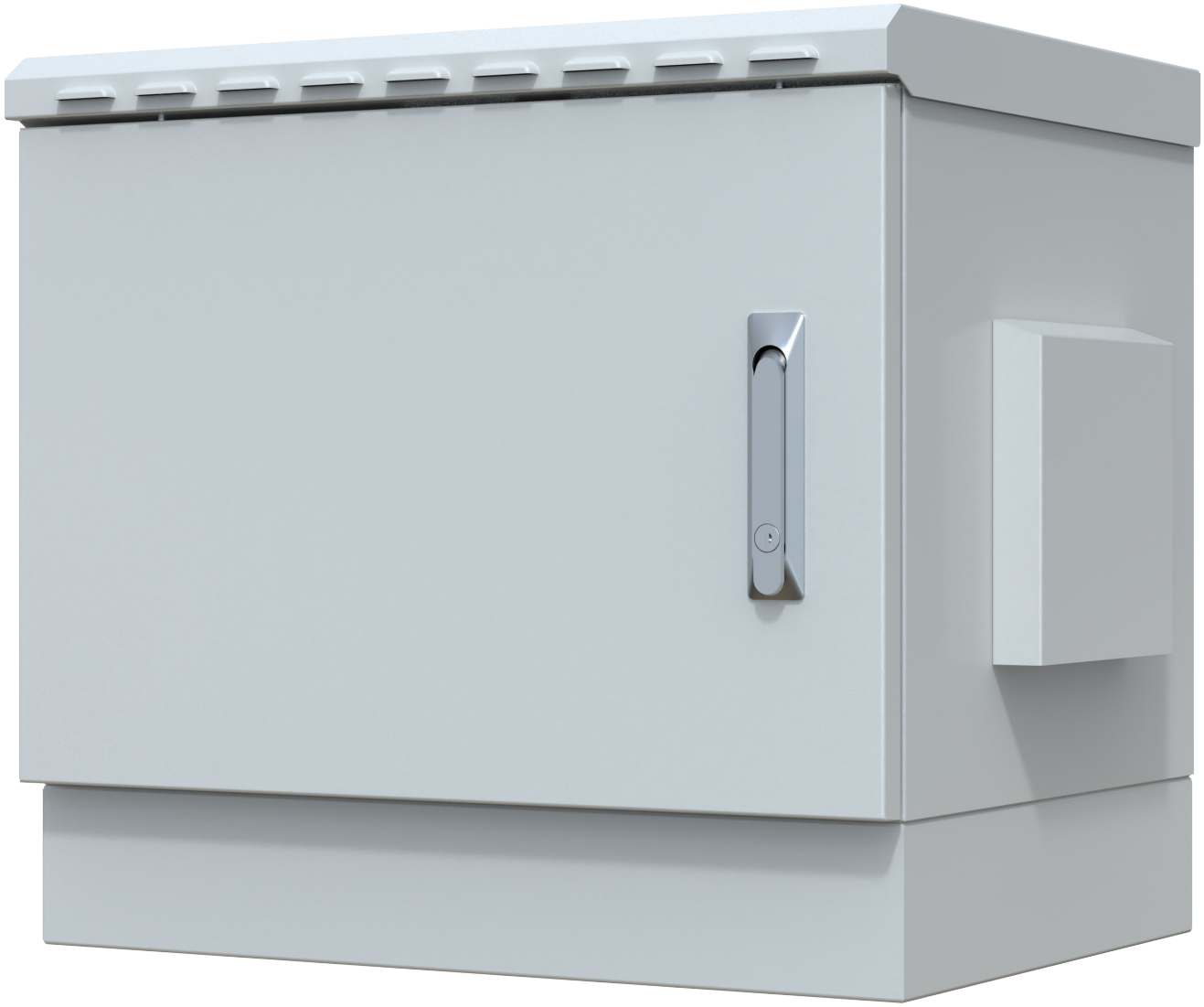



4444 KEY LOCK

STX-ES-7U450 CABINET WEIGHT

34.5 / 35.5 kg
76 / 78.3 lbs.

STX-ES-7U600 CABINET WEIGHT

42 / 43 kg
92.6 / 94.8 lbs.

STX-ES-12U450 CABINET WEIGHT

40 / 41 kg
88.2 / 90.4 lbs.

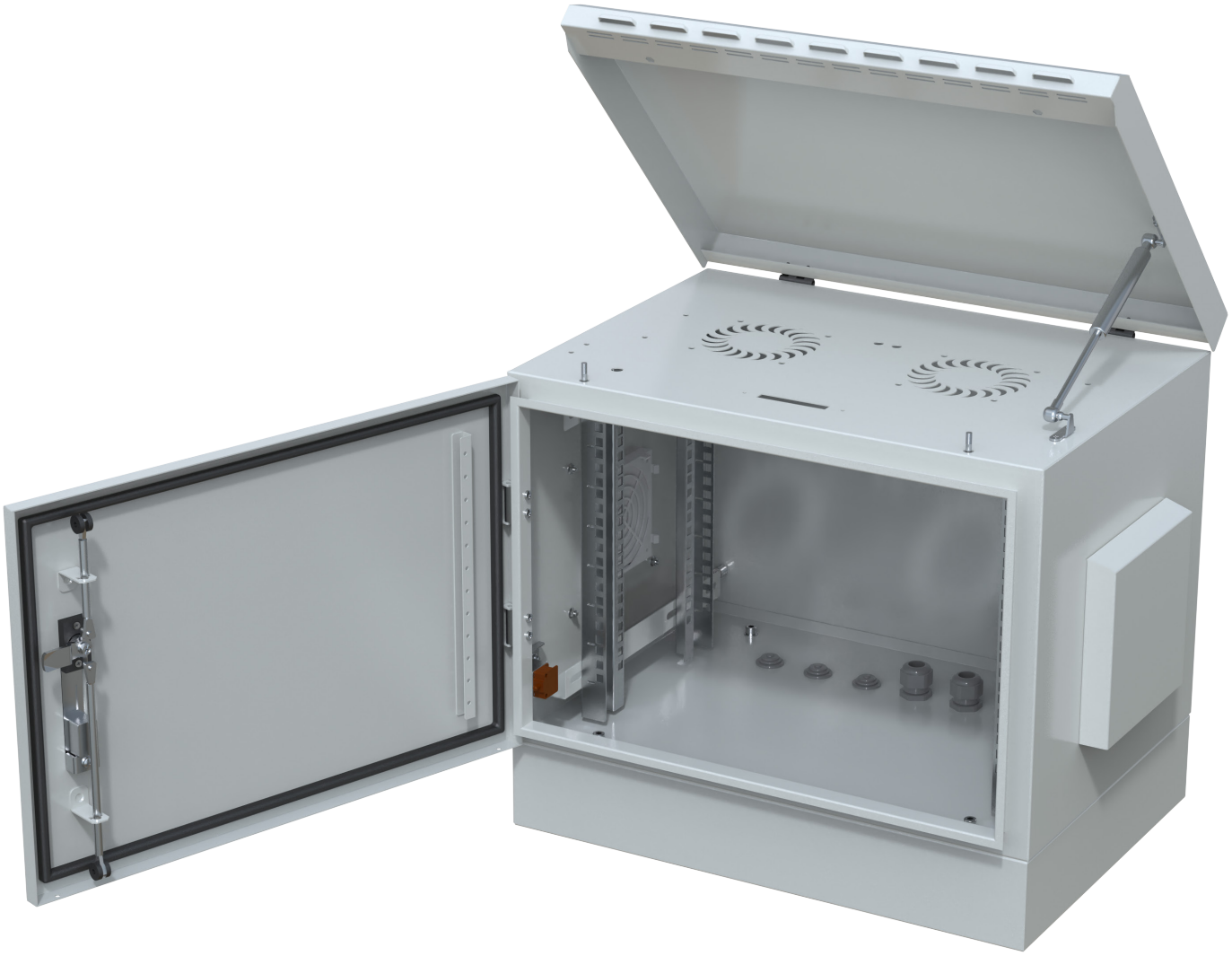

FEATURES

- 19” Device Compatibility
- IP66 Protection
- Device mounting rails can be adjusted to the front or rear as required.

APPEARANCE & MATERIAL

- **Finish Surface :** Powder Coating
- **Color Code :** RAL7035
- 1.2mm Galvanized

DIMENSIONS
STX-ES-7U450

- **Size :** 7U
- **Width :** 23.62”(600 mm)
- **Height :** 21.81”(554 mm)
- **Depth :** 17.72” (450 mm)
- **X :** 14.02”(356mm)

DIMENSIONS
STX-ES-7U600

- **Size :** 7U
- **Width :** 23.62”(600 mm)
- **Height :** 21.81”(554 mm)
- **Depth :** 23.62”(600 mm)
- **X :** 356mm(14.02”)

DIMENSIONS
STX-ES-12U450

- **Size :** 12U
- **Width :** 23.62”(600 mm)
- **Height :** 30.55”(776 mm)
- **Depth :** 17.72” (450 mm)
- **X :** 578mm(22.76”)

- **TECHNICAL DIMENSIONS**

Front View

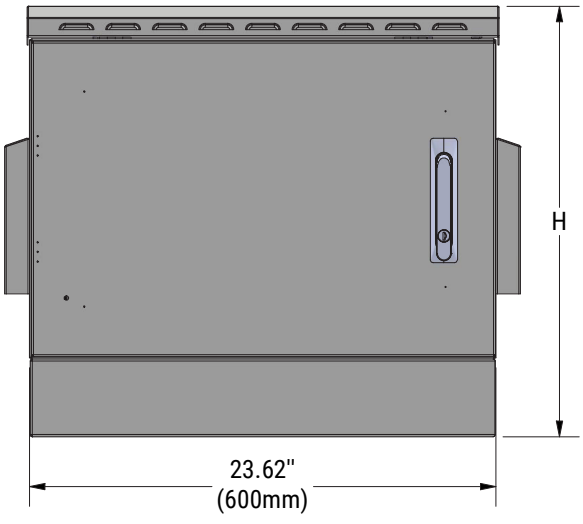

Side View

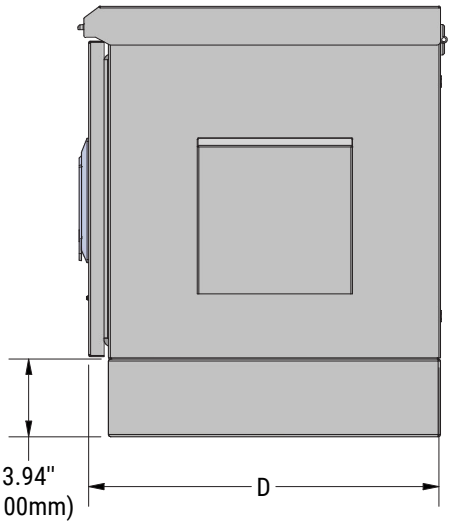

Top View

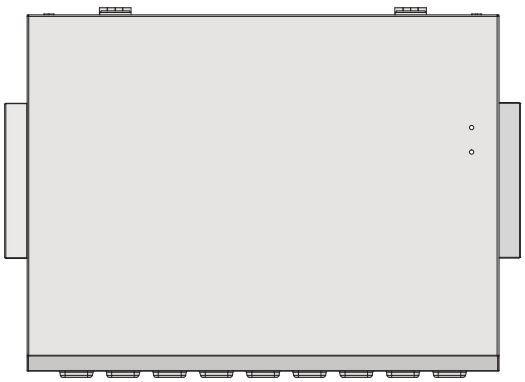

Bottom View

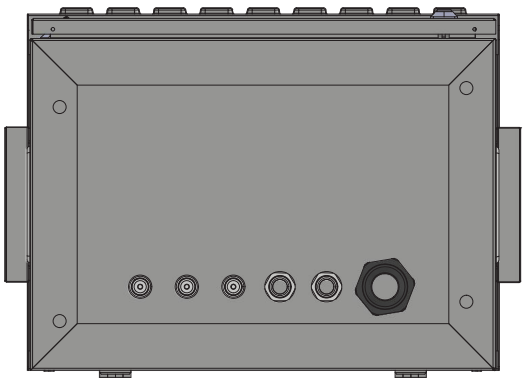

Front View Details

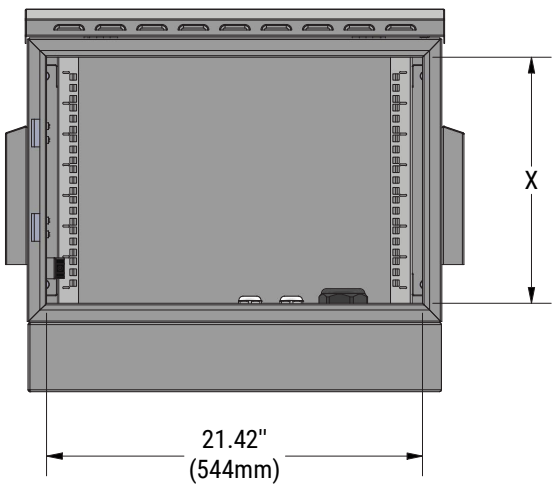

Front Isometric View

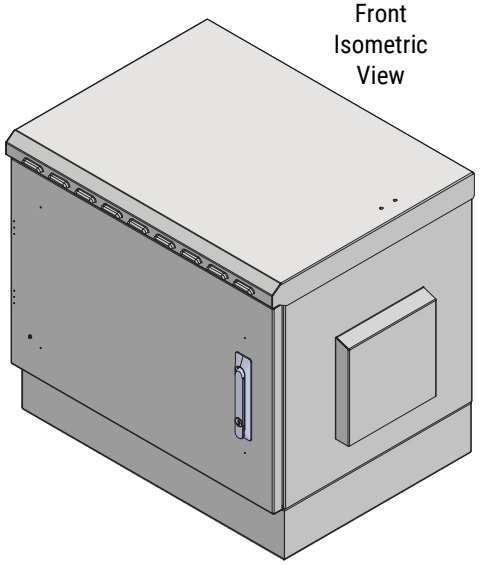

- **EXPLODED PRODUCT DETAILS**

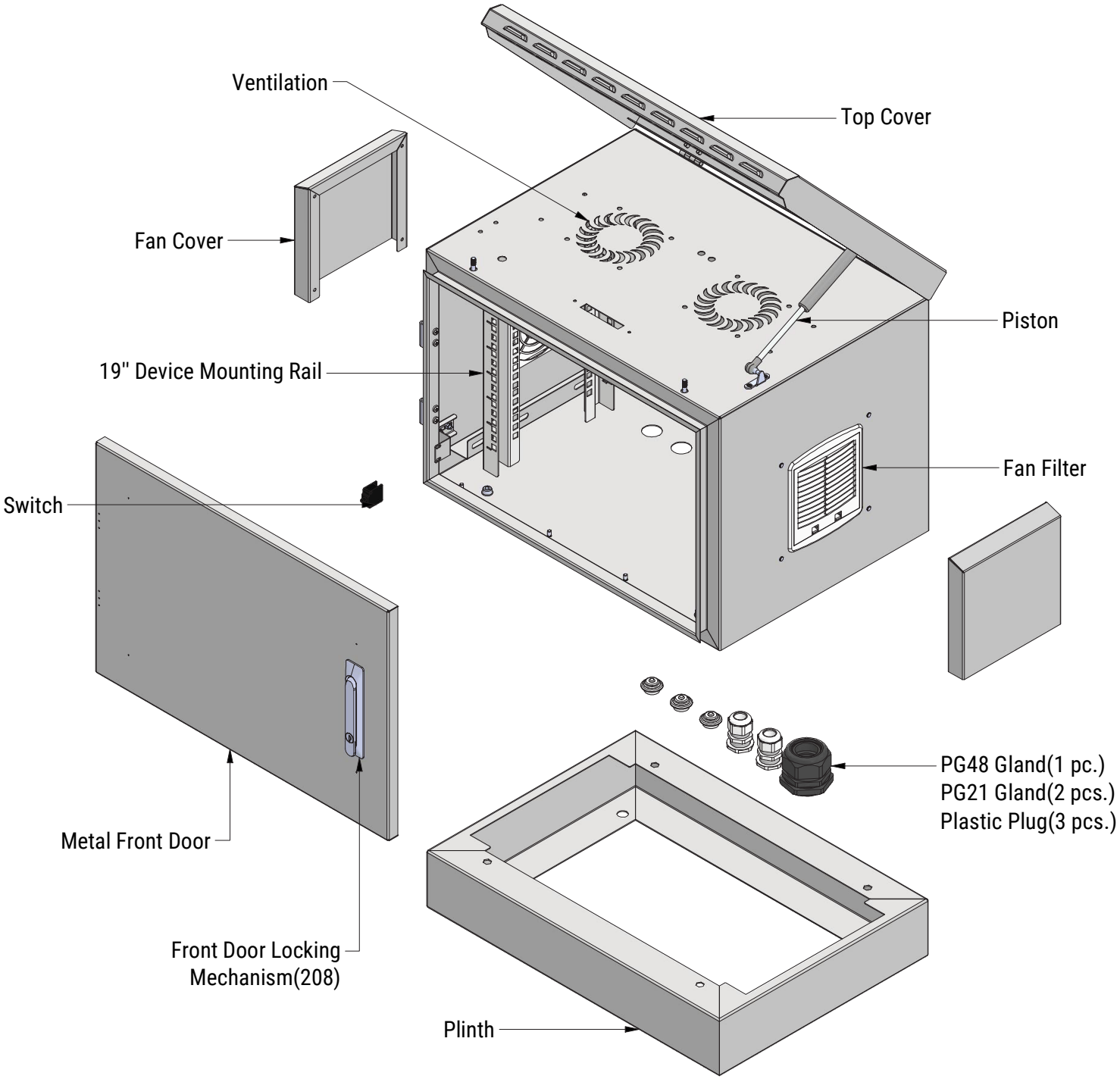

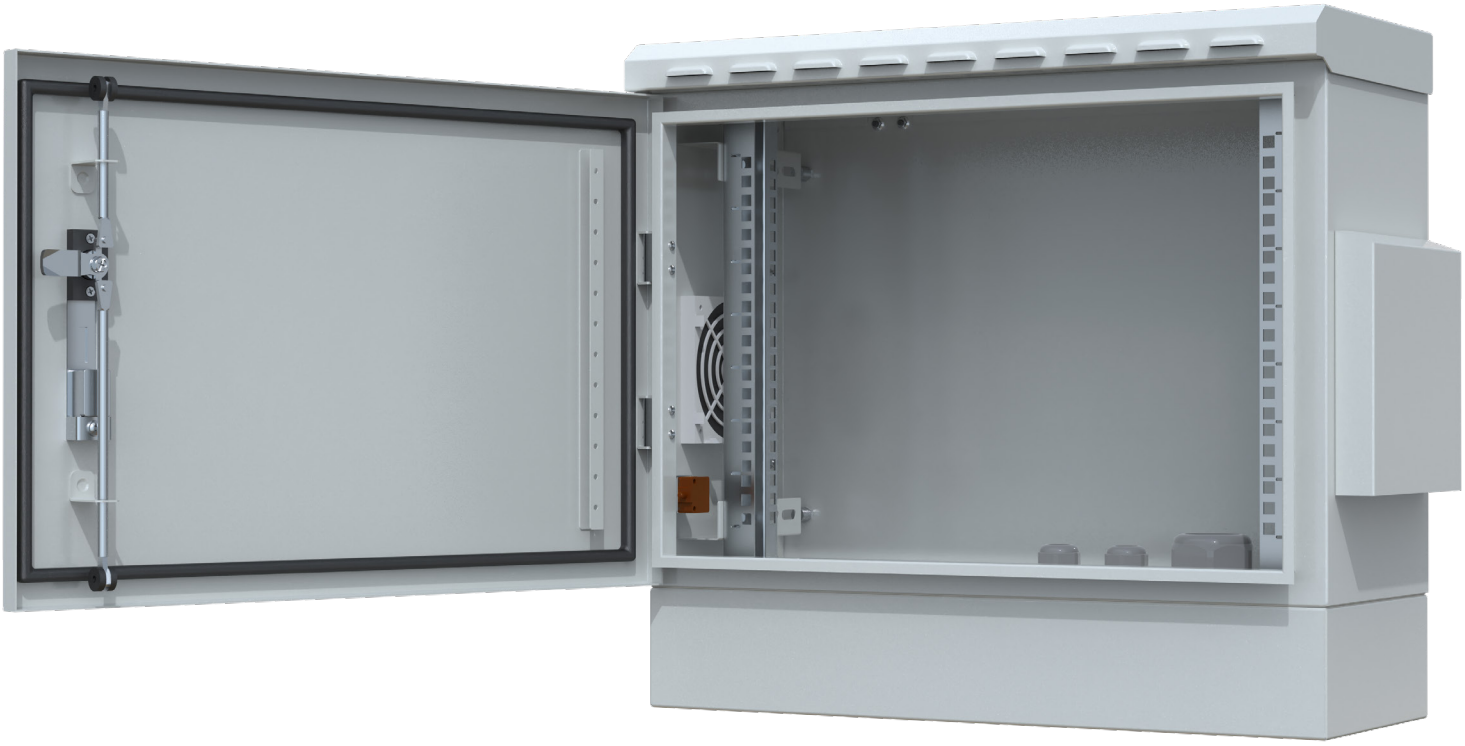

FEATURES
- 19” Device Compatibility
- IP66 Protection
- Device mounting rails can be adjusted to the front or rear as required.

MATERIAL
- 1.2mm Galvanized

APPEARANCE
- **Finish Surface :** Powder Coating
- **Color Code :** RAL7035

- **TECHNICAL DIMENSIONS**

Front View

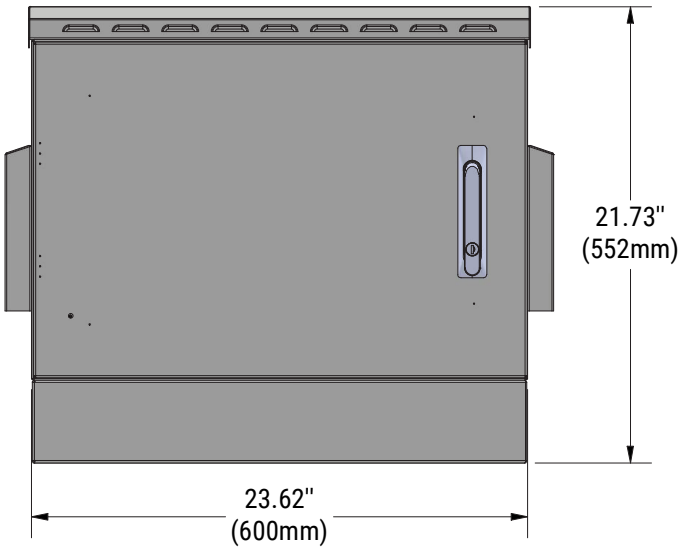

Side View

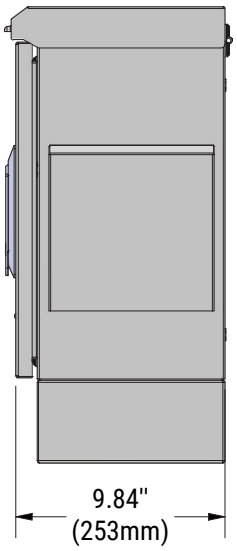

Top View

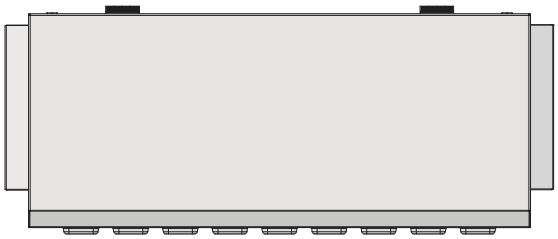

Bottom View

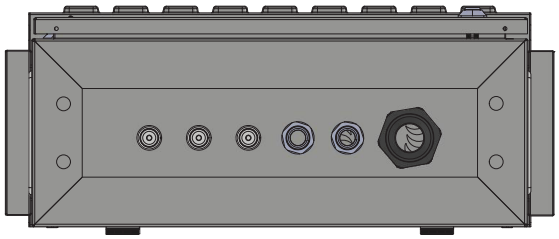

Front View Details

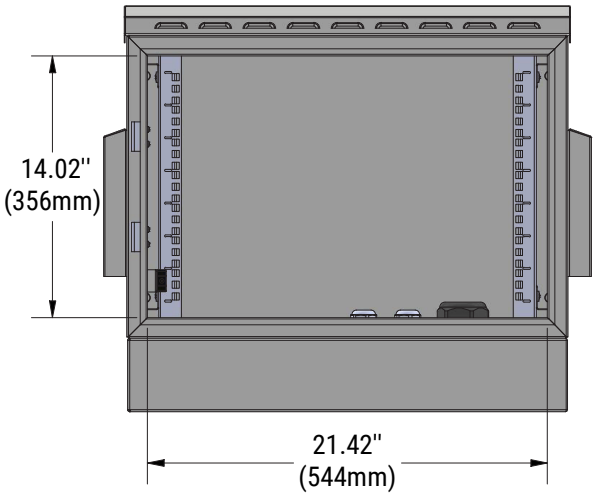

Front Isometric View

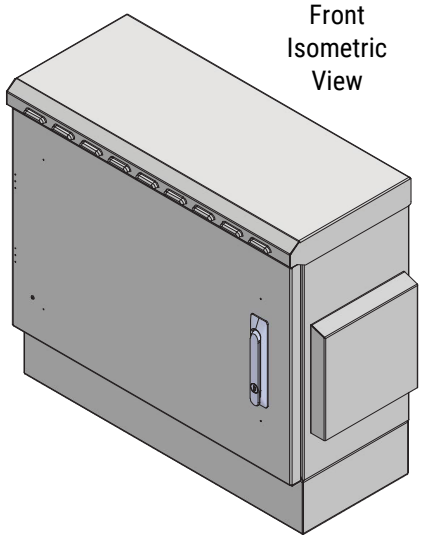

- **EXPLODED PRODUCT DETAILS**

